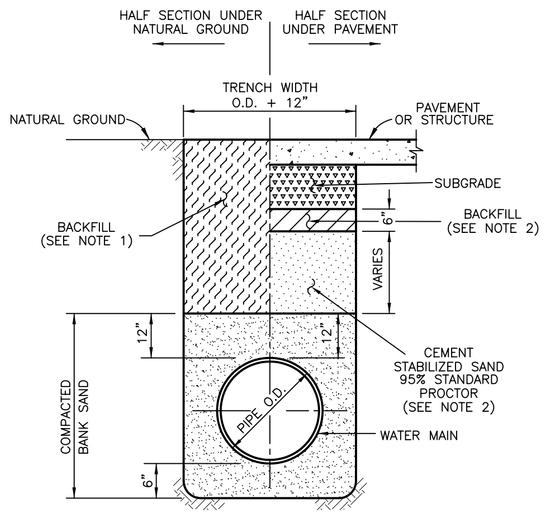

NOTES

1. BACKFILL SHALL BE NATIVE SOIL, FREE OF DEBRIS, PLACED IN LIFTS, 8" THICK OR LESS, COMPACTED TO 90% STANDARD PROCTOR DENSITY, EXCEPT AS REQUIRED BELOW.
2. BACKFILL UNDER AND WITHIN 3 FEET OF DRIVEWAYS AND PUBLIC STREETS SHALL BE CEMENT STABILIZED SAND (1.5 SACKS OF CEMENT PER CUBIC YARD OF SAND), EXCEPT THE TOP 6" SHALL BE NATIVE SOIL, FREE OF DEBRIS. ALL BACKFILL UNDER PAVING SHALL BE COMPACTED TO 95% STANDARD PROCTOR DENSITY.
3. TRENCH SHORING, IN ACCORDANCE WITH OSHA, SHALL BE INSTALLED AS REQUIRED.

1. WATER LINE BEDDING

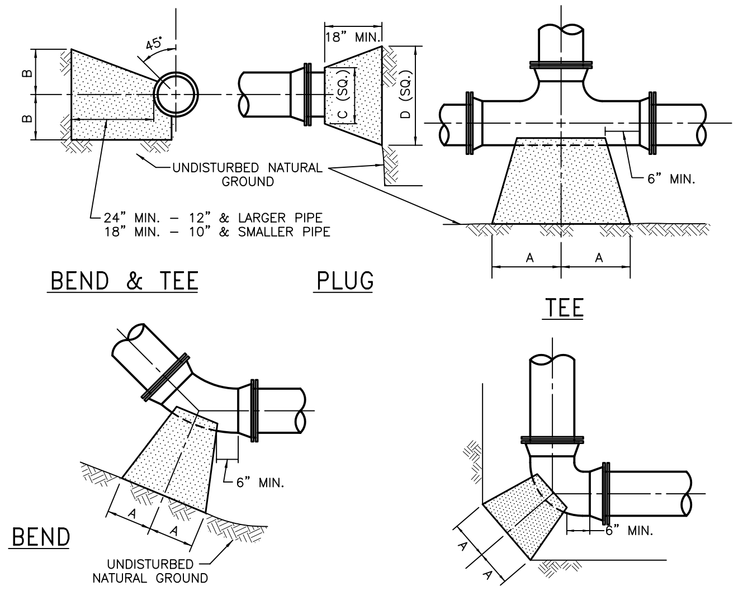

SIZE	90° BEND		45° BEND		22½° BEND		TEES		PLUGS	
	A	B	A	B	A	B	A	B	C	D
2½"	12"	7"	6"	7"	6"	6"	7"	8"	8"	14"
4"	14"	8"	7"	9"	6"	6"	8"	11"	8"	18"
6"	16"	10"	9"	10"	6"	8"	10"	12"	10"	21"
8"	22"	13"	12"	13"	8"	10"	13"	16"	12"	29"
12"	29"	21"	16"	21"	11"	16"	18"	24"	16"	41"
16"	38"	27"	21"	27"	12"	24"	24"	30"	20"	54"

NOTES:
1. THRUST BLOCKS AT TRENCH FACE MUST HAVE A MINIMUM BEARING SURFACE OF 1.0 SQ. FOOT AND THE LEAST DIMENSION SHALL BE NO SMALLER THAN 1.5 TIMES PIPE DIAMETER, BUT NOT LESS THAN 1.0 FT.
2. THRUST BLOCKS SHALL BE PACKED AT ALL FITTINGS.
3. ALL FITTINGS SHALL BE M.J. RESTRAINED JOINT (EBAA IRON, SERIES 2000PV, OR APPROVED EQUAL).

2. THRUST BLOCK

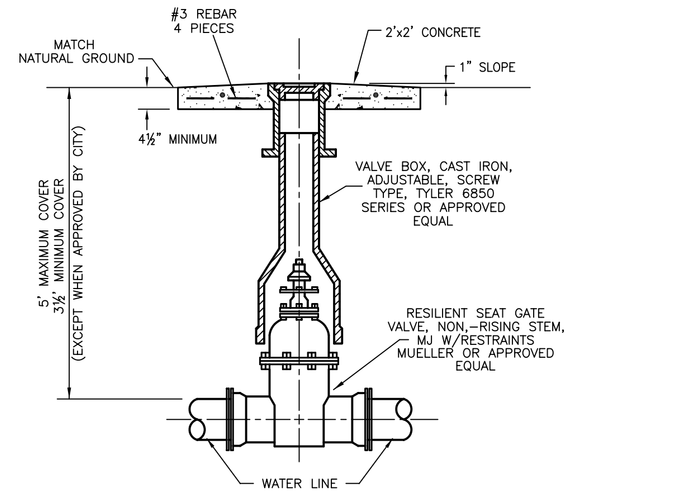

NOTES:
1. PROVIDE OPERATING NUT EXTENSION, AS NEEDED, TO APPROXIMATELY THREE (3) FEET BELOW FINISHED GRADE.
2. VALVE BOX SHALL NOT TRANSMIT ANY LOAD DIRECTLY TO THE VALVE OR PIPE.
3. GATE VALVES SHALL BE COUNTER-CLOCKWISE OPEN.
4. TAPPING VALVES ARE NOT ALLOWED WHEN TAP IS SAME SIZE AS THE EXISTING MAIN EXCEPT WHEN APPROVED BY PUBLIC WORKS.

3. GATE VALVE AND BOX

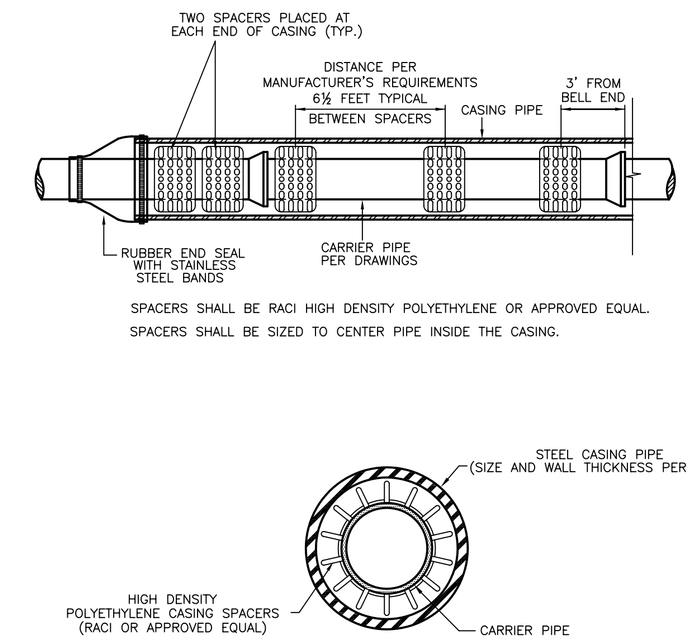

SPACERS SHALL BE RACI HIGH DENSITY POLYETHYLENE OR APPROVED EQUAL.

SPACERS SHALL BE SIZED TO CENTER PIPE INSIDE THE CASING.

NOTES:
1. CASING SPACERS SHALL BE USED TO INSTALL THE CARRIER PIPE INSIDE THE ENCASEMENT PIPE TO PROVIDE SUPPORT AROUND THE PERIPHERY OF THE PIPE. MINIMUM CLEARANCE BETWEEN MAXIMUM O.D. OF CARRIER PIPE AND I.D. OF CASING SHALL BE ONE INCH.
2. SPACERS SHALL BE PROJECTION TYPE, WITH A MINIMUM NUMBER OF PROJECTIONS AROUND THE CIRCUMFERENCE EQUAL TO THE NUMBER OF DIAMETER INCHES OF THE CARRIER PIPE. CASING SPACERS SHALL BE TOTALLY NON-METALLIC SPACERS CONSTRUCTED OF INTERLOCKING PREFORMED SECTIONS OF HIGH DENSITY POLYETHYLENE. SPACERS SHALL BE ISO 9002 CERTIFIED FOR STRENGTH AND QUALITY.
3. THE ENDS OF THE CASING SHALL BE SEALED USING PWM MODEL 1 WA WRAP AROUND END SEAL MADE OF 1/8" THICKNESS RUBBER AND STAINLESS STEEL BANDS, OR APPROVED EQUAL.

PVC PIPE IN CASING

DR18 C900/C905 PVC PIPE	OD"	BELL OD"	STEEL CASING DIAMETER	RACI SPACERS MODEL*
4"	4.80"	6.38"	10"	2F 41
6"	6.90"	8.88"	12"	2F, 1G 41
8"	9.05"	11.38"	14"	3F, 1G 41
10"	11.10"	13.97"	16"	4F 41
12"	13.20"	16.34"	20"	5F 60
14"	15.30"	18.23"	22"	6F 60
16"	17.40"	20.58"	24"	7F 60

7. WATER LINE CASING

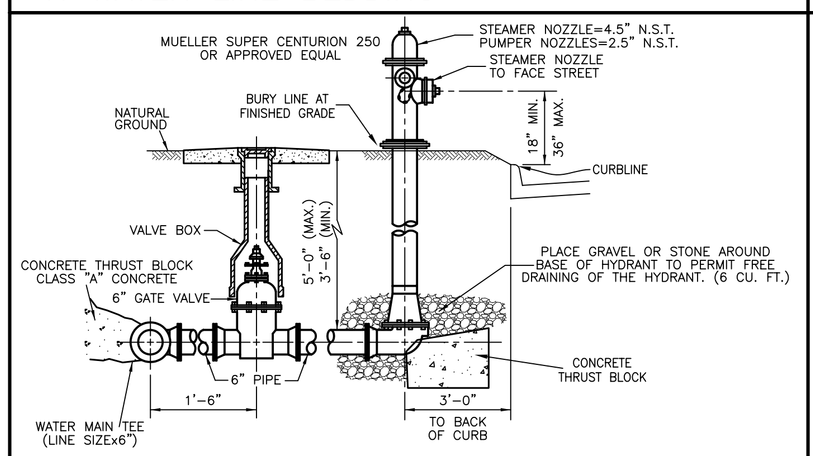

NOTES:
1. 5/8" ALL-THREAD IS TO BE USED TO TIE VALVE TO TEE AND VALVE TO HYDRANT.
2. PROVIDE MECHANICAL RESTRAINED JOINTS (EBBA IRON, SERIES 2000PV, OR APPROVED EQUAL).
3. PAINT ALL FIRE HYDRANT BARRELS SILVER. PAINT BONNET AND CAPS IN ACCORDANCE WITH CITY OF RICHMOND REQUIREMENTS BASED ON FLOW CAPACITIES. (COLORS: BLUE-1500 GPM AND ABOVE; GREEN-1000 GPM TO 1499 GPM; ORANGE-500 GPM TO 999 GPM; RED-LESS THAN 500 GPM).

4. FIRE HYDRANT

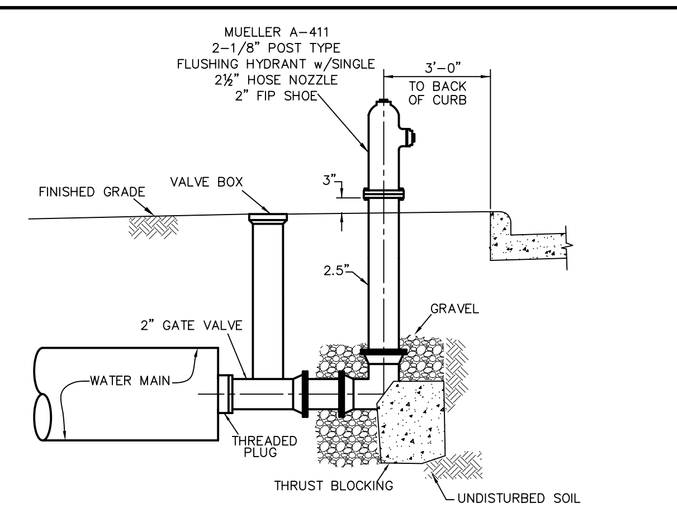

NOTE:
1. ON OPEN-DITCH ROADWAYS, SET THE FLUSHING HYDRANTS WITHIN 3 FEET OF ROAD RIGHT-OF-WAY LINE.
2. PAINT ALL FLUSH VALVES SILVER.

5. 2" BLOWOFF VALVE ASSEMBLY

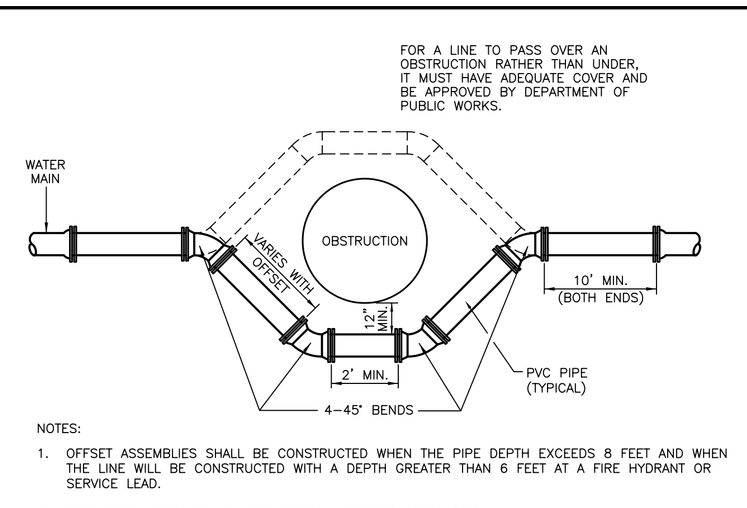

NOTES:
1. OFFSET ASSEMBLIES SHALL BE CONSTRUCTED WHEN THE PIPE DEPTH EXCEEDS 8 FEET AND WHEN THE LINE WILL BE CONSTRUCTED WITH A DEPTH GREATER THAN 6 FEET AT A FIRE HYDRANT OR SERVICE LEAD.
2. PIPE-AWWA C900 DR-18, 150 PSI WITH INTEGRAL PVC JOINT.
3. FITTINGS-DUCTILE IRON EPOXY LINED AND COATED, MECHANICAL RESTRAINED JOINT (EBAA IRON, SERIES 2000PV, OR APPROVED EQUAL).
4. PROVIDE 2-5/8" ALL-THREAD RODS BETWEEN ALL FITTINGS.

6. WATER PIPE OFFSET ASSEMBLY

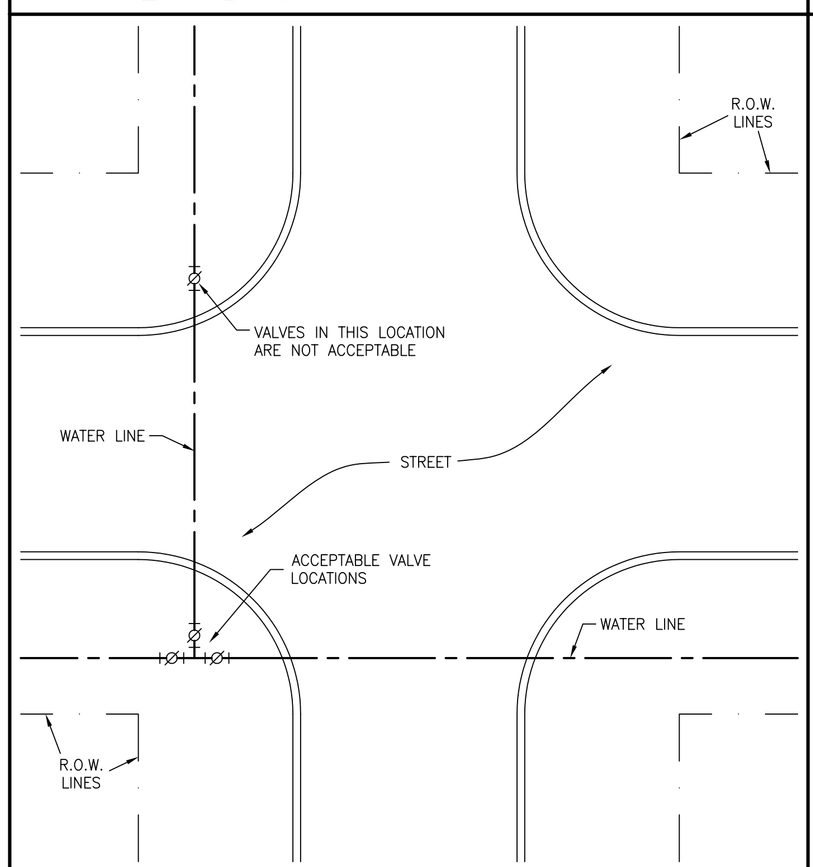

8. VALVE LOCATION PLAN

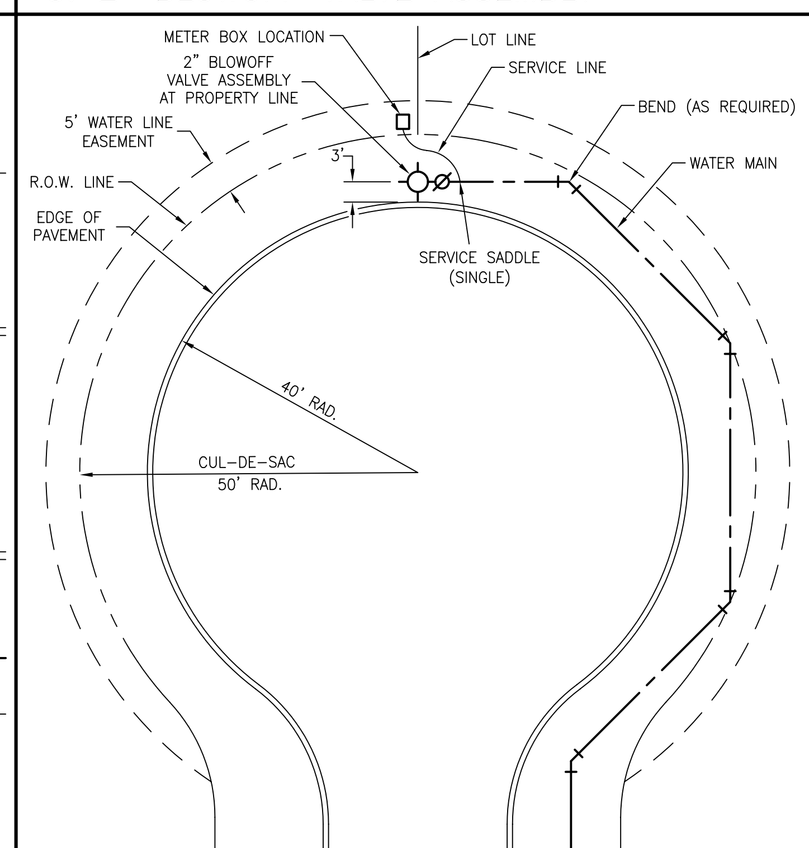

9. BLOWOFF LOCATION PLAN

NO.	DATE	REVISIONS	APP.

CITY OF RICHMOND
APPROVALS

LENERT KURTZ, DIRECTOR OF PUBLIC WORKS — DATE

GARREN SCHMIDT, WATER SUPERINTENDENT — DATE

WADE WENDT, WASTEWATER SUPERINTENDENT — DATE

JIM WHITEHEAD, STREET SUPERINTENDENT — DATE

DWAYNE PRICE, PARKS SUPERINTENDENT — DATE

CITY OF RICHMOND
STANDARD CONSTRUCTION DETAILS
WATER

SCALE		
HORIZONTAL	1" = NTS	DESIGNED BY: RWS
VERTICAL	1" = NTS	DRAWN BY: DCB
		CHECKED BY: KRK
		DATE: OCTOBER 24, 2005
		JOB NO:
		DWG. NO:
		Sheet: R-2 of